MINEWSEMI

GNSS Module

MS38SN5



Datasheet

V 1.0.0

Copyright©
Shenzhen Minewsemi Co., Ltd.

Version Note

Version	Details	Contributor(s)	Date	Notes
1.0.0	First edit	Michelle, Leo	2024.06.07	

Part Number

Model	Hardware Code
MS38SN5	4NN

Click the icon to view and download the latest product documents electronically.
https://en.minewsemi.com/file/MS38SN5_Datasheet_EN.pdf

INDEX

1 Product Introduction ---- 04
1.1 General Description ---- 04
1.2 Key Parameter ---- 04
2 Technical Information ---- 05
2.1 Supported Constellations ---- 05
2.2 SBAS ---- 05
2.3 QZSS ---- 05
3 Electrical Specification ---- 05
3.1 Absolute Maximum Rating ---- 05
3.2 Electrical Parameters ---- 06
4 Antenna Performance ---- 06
4.1 Location of the Antenna ---- 06
4.2 Antenna Parameters ---- 06
4.3 Intra-bandwidth Interference ---- 07
4.4 Out-of-band Interference ---- 07
4.5 Serial EMI ---- 07
5 Software Protocol ---- 08
5.1 NMEA0183 Protocol ---- 08
5.2 Sample Data ---- 08
5.3 Example of an Actual Star Search ---- 09
5.4 Common Commands ---- 09
6 Hardware Interfaces ---- 10
6.1 Sizes ---- 10
6.2 Interface Definition ---- 10
7 Packaging and Protection ---- 11
7.1 Packaging ---- 11
7.2 Electrostatic Protection ---- 11
8 Ordering Information ---- 12
8.1 Order Part Number ---- 12
9 Storage Conditions ---- 12
10 Handling Conditions ---- 12
11 Quality ---- 12
12 Copyright Statement ---- 13
13 Related Documents ---- 13

 Copyright© Shenzhen Minewsemi Co., Ltd.

1 PRODUCT INTRODUCTION

1.1 General Description

The MS38SN5 is a multi-constellation concurrent, ultra-low power GNSS positioning module that can receive and track multiple GNSS systems, supporting GPS, BEIDOU, GLONASS, GALILEO, IRNSS, QZSS, and satellite-based augmentation systems SBAS (WAAS, EGNOS, GAGAN, MSAS).

The MS38SN5 features a standard industrial-grade design, ROHS process, high sensitivity, anti-interference, high performance and ultra-low power consumption. Since all four major GNSS constellations (GPS, Beidou, Glonass and Galileo) can be received simultaneously in the multi-constellation RF front-end architecture, which gives the module excellent sensitivity and acquisition capabilities, the excellent interference suppression characteristics allow the receiver to achieve reliable positioning even under difficult signal conditions.

The products are suitable for use in locators, wearable devices, IoT low-power positioning and other scenarios.

1.2 Key Parameters

MS38SN5 Parameters	
Constellation	BDS: B1I 、B1C* GPS: L1C/A、L1C* GLONASS: G1 Galileo: E1B/C QZSS: L1C/A SBAS: L1
Operating Frequency	Cold Start: -149dBm Reacquisition: -159dBm Tracking: -165dBm
Cold Start1	Average 24 seconds
Hot Start1	Average 1 second
Positional Accuracy2	1.0m CEP
Speed and Time Accuracy2	GNSS 0.1 m/s CEP　1PPS：25ns
Maximum Height[3]	18000m
Maximum Speed[3]	500 m/s
Baud	115200bps （Factory Default）
Update Frequency	Support 1-10Hz, default 1Hz
Supported Protocols	RTCM Protocol implemented according to RTCM STANDARD； NMEA 0183 Protocol Ver. 4.00/4.10,

Notice： 1 All satellites at -130 dBm　2CEP, 50%, 24 hours static, -130 dBm, > 6 SVs
[3]Assuming Airborne < 4 g platform　* Represents firmware option support

 Copyright© Shenzhen Minewsemi Co., Ltd.

2 TECHNICAL INFORMATION

2.1 Supporting Constellations

Due to its multi-constellation RF front-end architecture, the MS38SN5 can concurrently support the L1 band of GPS, BEIDOU, GLONASS, GALILEO, QZSS, and Satellite Based Augmentation System SBAS (WAAS, EGNOS, GAGAN, MSAS.) The MS38SN5 module can be configured to concurrently support GPS, GLONASS, Galileo and BDS as well as QZSS constellations. Galileo and BDS and QZSS constellations.

2.2 SBAS

The MS38SN5 supports the reception of SBAS broadcast signals. These systems supplement GNSS data with other regional or wide area GPS augmentation data. The system broadcasts distance correction and integrity information via satellite, which can be used by GNSS receivers to improve the accuracy of results. SBAS satellites can be used as additional satellites for ranging (navigation) to further improve availability. The following SBAS types are supported: GAGAN, WAAS, EGNOS and MSAS.

Typology	Satellite Navigation System	Operation and Maintenance Country/Region
Master Navigation System (GNSS)	GPS BDS GLONASS GALILEO	America China Russia European Union
local Navigation system	QZSS	Japan
Star-based Wide Area Strengthening (SBAS)	WASS EGNOS MSAS GAGAN	America European Union Japan Indian

2.3 QZSS

The Quasi-Zenith Satellite System (QZSS) is a navigation satellite coverage system for the Pacific region of Japan and Australia that transmits other GPS L1C/A and L5 signals. The module is able to receive and track these signals simultaneously with GPS, improving usability, especially in maintaining positioning in harsh signal conditions such as urban canyons.

3 ELECTRICAL SPECIFICATION

3.1 Absolute Maximum Rating

Parameters	Minimum Value	Maximum Value	Unit
Power Supply Voltage	0	4.2	V
Serial Port Input Voltage	-0.5	3.6	V
ESD Contact	-	2000	V
Storage Temperature	-40	+85	℃

 Copyright© Shenzhen Minewsemi Co., Ltd.

Applying pressure beyond the "absolute maximum ratings" to the device may cause permanent damage.
The provided data represents pressure levels only. The product does not have overvoltage or reverse voltage protection. If necessary, appropriate protection diodes must be used to limit voltage spikes above the specified range of power supply voltage specifications mentioned in the table.

3.2 Electrical Parameters

Parameters	Min	Typ	Max	Units
Power Supply Voltage	2.8	3.3	4.2	V
Supply Current (Acquisition)	-	9.0	-	mA
Supply Current (Tracking)	-	7.0	-	mA
System Idle Mode	-	2.4	-	mA
System Sleep Mode	-	175	-	uA
Operation Temperature	-40	+25	85	℃

All specifications are performed at an ambient temperature of 25°C. Extreme operating temperatures can severely affect specification values. Applications operating near temperature extremes.
The values in the table are for customer reference only and are only examples of typical power requirements. Values are sampled, actual power requirements will vary depending on firmware version used. external circuitry, number of satellites tracked, signal strength, type of start-up as well as time, duration and test conditions.

4 ANTENNA PERFORMANCE

4.1 Location of the Antenna

The antenna is a critical part of any GNSS receiver design. The antenna mounting location is critical for optimal performance of the GNSS receiver. The GNSS signal is right-hand circularly polarized (RHCP). The antenna plane should be parallel to the geographic range when the antenna is used. The antenna must have a full view of the sky to ensure a direct line of sight to as many visible satellites as possible. The antenna should be located as far as possible from radiated or interfering signals.

4.2 Antenna Parameters

Characteristics	Min	Typ	Max	Units
Frequency (BDS-B1/GPS-L1/GLONASS-G1/GALILEO-E1)	-	1561.098 1575.42	-	MHz
Standing Wave V.S.W.R(in Center Frequency)	-	-	1.5	-
Gain(Zenith)	-	-2	-	dBi
Impedance	-	50	-	Ω
Axial Ratio	-	-	3	dB
Frequency Temperature Coefficient	-10	0	10	ppm/℃

⚠ Notice: Interfering signals from in-band and out-of-band frequency sources may degrade performance.

 Copyright© Shenzhen Minewsemi Co., Ltd.

4.3 In-band Interference

In-band Interference occurs when the signal frequency is very close to the GPS frequency of 1575 MHz. Such interference signals are usually caused by harmonics generated by displays, microcontrollers, bus systems, etc.

Measures to prevent in-band interference include:

- Shielding layer
- Layout Optimization
- Filtering radio waves
- Location of GPS antenna

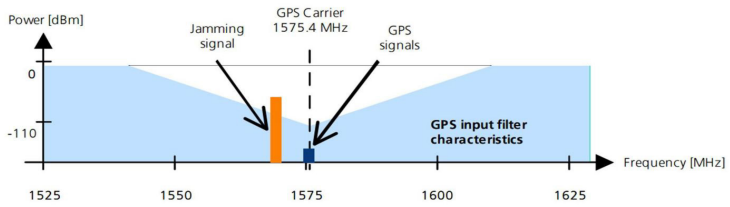

4.4 Out-of-band Interference

Out-of-band interference is usually caused by signal frequencies different from the GPS carrier. The source is usually a wireless communication system such as GSM, CDMA, WCDMA, WiFi, BT, etc.

The MS38SN5 is configured with an acoustic meter filter, which can be added to reduce out-of-band interference by adding a SAW filter.

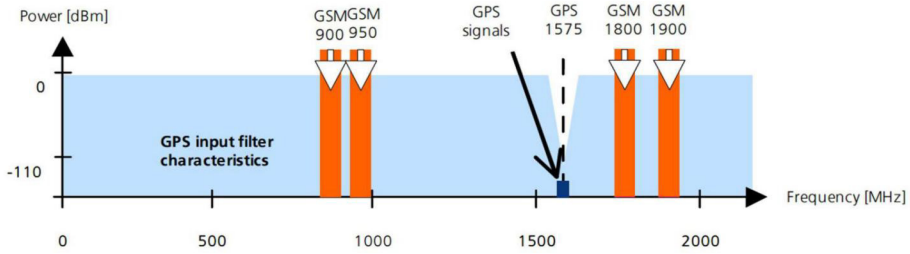

4.5 Serial EMI

Any I/O signal line longer than about 3 mm can act as an antenna and can pick up any RF signal and transmit it as noise to a GNSS receiver. This applies in particular to unshielded lines where the corresponding GND layer is far away or completely missing and where the line is close to the edge of the printed circuit board.
If, for example, cellular signals are radiated into an unshielded, high-impedance line, noise of the order of volts may be generated, which can not only distort the receiver operation but also cause permanent damage. On the other hand, noise generated at the I/O pins will emanate from the unshielded I/O lines. When this noise is coupled to the GNSS antenna, receiver performance may degrade.
To avoid interference caused by improper shielding, it is recommended that a resistor (e.g., R> 20 W), ferrite bead (e.g., BLM15HD102SN1), or inductor (e.g., LQG15HS47NJ02) be used in series on the I / O lines. These components should be chosen carefully as they can also affect the signal rise time. The following shows an example of EMI protection measures on the RXD / TXD lines using ferrite beads.

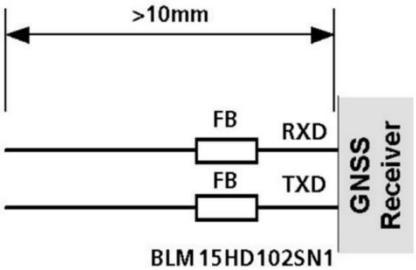

 Copyright© Shenzhen Minewsemi Co., Ltd.

5 SOFTWARE PROTOCOL

5.1 NMEA0183 Protocol

The NMEA protocol is an ASCII-based protocol where records begin with a $ and start with a carriage return/line feed character. GPS-specific messages all begin with $GNxxx, where xxx is the three-letter identifier of the message data that follows. NMEA messages have checksums that can be used to detect corrupted data transmissions. $GPxxx is used for GPS.

NMEA Record	Description	Default
GNGGA	Global positioning system fixed data	Y
GNGLL	Geographic position—latitude/longitude	Y
GNGSA	GNSS DOP and active satellites	Y
GPGSV	GNSS satellites in view for GPS	Y
GLGSV	GNSS satellites in view for GLONASS	Y
GBGSV	GNSS satellites in view for BD	Y
GAGSV	GNSS satellites in view for Galileo	Y
GNRMC	Recommended minimum specific GNSS data	Y
GNVTG	Course over ground and ground speed	N
GNZDA	Date and Time	N

5.2 Sample Data

Serial port data within 1 second after positioning example:

$GNRMC,012046.000,A,2240.07552,N,11402.14869,E,0.000,0.000,231123,,,A,S*0B
$GNGGA,012046.000,2240.07552,N,11402.14869,E,1,24,0.683,122.1,M,-2.2,M,,*50
$GNGLL,2240.07552,N,11402.14869,E,012046.000,A,A*43
$GNGSA,A,3,23,10,18,24,15,32,5,12,194,196,,,1.185,0.683,0.968,1*08
$GNGSA,A,3,24,16,41,33,39,38,8,13,6,25,27,9,1.185,0.683,0.968,4*01
$GNGSA,A,3,69,,,,,,,,,,,1.185,0.683,0.968,2*3A
$GNGSA,A,3,13,,,,,,,,,,,1.185,0.683,0.968,3*36
$GPGSV,3,1,11,5,14,114,25,10,22,321,30,15,30,46,32,18,65,230,32,1*69
$GPGSV,3,2,11,23,52,350,33,24,58,44,32,32,19,271,23,199,,,24,1*54
$GPGSV,3,3,11,196,65,63,30,12,18,131,22,194,26,133,28,1*65
$GBGSV,4,1,15,24,33,60,34,33,45,38,34,38,72,85,36,39,79,286,35,1*45
$GBGSV,4,2,15,59,,,34,3,,,34,8,72,34,33,6,71,240,33,1*77
$GBGSV,4,3,15,9,56,226,31,13,68,359,34,16,77,253,34,25,54,140,35,1*4E
$GBGSV,4,4,15,27,22,286,33,41,37,325,32,1,,,32,1*4F
$GLGSV,1,1,4,69,28,324,25,,,,26,68,32,25,24,,,,25,1*76
$GAGSV,1,1,3,13,64,221,33,7,48,308,31,8,40,28,31,7*47

 Copyright© Shenzhen Minewsemi Co., Ltd.

5.3 Example of an Actual Star Search

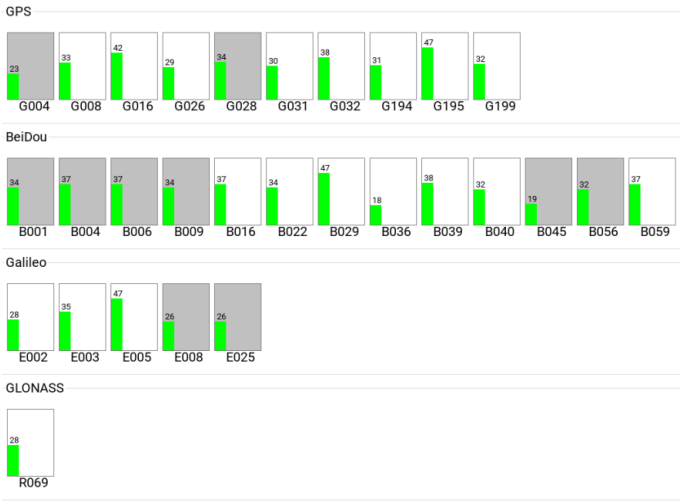

5.4 Common Commands

CMD TYPE	CMD Example
Hot Start	$RESET,0,h00
Warm Start	$RESET,0,h01
Cold Start	$RESET,0,hFF
Baud rate 115200	$CFGPRT,,h0,115200,129,35
Baud rate 9600 (too many satellites may congest the serial port)	$CFGPRT,,h0,9600,129,35
Turn off GSV output	$CFGMSG,0,3,0
Turn off GSA output	$CFGMSG,0,2,0
Turn off GLL output	$CFGMSG,0,1,0
Disable VTG output (disabled by defaultl)	$CFGMSG,0,5,0
Disable ZDA output (disabled by default)	$CFGMSG,0,6,0
Disable GST output (disabled by default)	$CFGMSG,0,7,0
GPS satellite reception only	$CFGSYS,h00030009
Reception of GPS, BDS satellites	$CFGSYS,h00030099
Receive GPS, GLO, GAL satellites	$CFGSYS,h00031109
Reception of GPS, BDS, GLO, GAL satellites	$CFGSYS,h00031199
Standby mode (RF, crystal, memory subsystem operation)	$CFGPOWER,2
Sleep Mode	$CFGPOWER,3

Note: Control commands should all add a carriage return (CR), line feed (CF)

 Copyright© Shenzhen Minewsemi Co., Ltd.

6 HARDWARE INTERFACES

6.1 Sizes

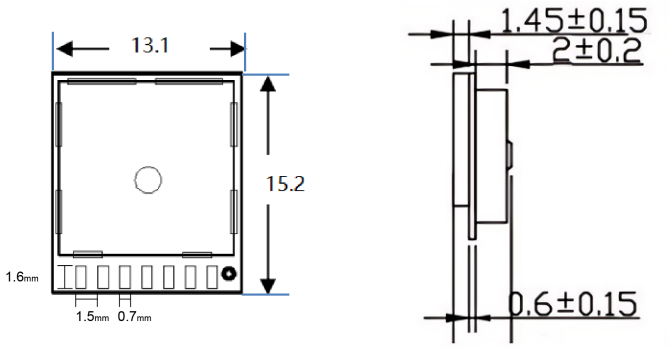

Dimensional Drawing View

Characteristics	Min	Typ	Max	Units
Length	-	15.2	-	mm
Width	-	13.0	-	mm
Height	-	4.5	-	mm
Antenna	-	2.0	-	mm

6.2 Interface Definition

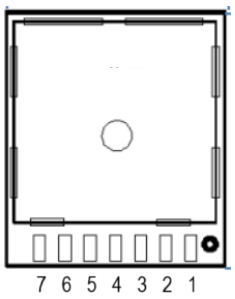

Pin Definition View

Pin	Name	Type	Pin Description
1	NC	N/A	N/A
2	NC	N/A	N/A
3	TXD	O	Serial TX Port (GPS to Host)
4	RXD	I	Serial RX Port (Host to GPS)
5	GPS_VCC	P	Mains supply
6	GND	G	Ground
7	PPS	O	Second pulse

※ Type : I (input), O (output), I/O (bidirectional), P (Power), G(Ground) Physical interface is a PADS pad

 Copyright© Shenzhen Minewsemi Co., Ltd.

7 PACKAGING AND PROTECTION

7.1 Packaging

The MS38SN5 is delivered in boxed packages for efficient production at 1050 PCS per box.

No	Part Name	Q,ty / Ctn	Out Size (mm)
1	Box Carton	1/1	500(W)mm×260(D)×250(H)mm
2	Pad Carton	7/1	-
3	Tray	150/1	-

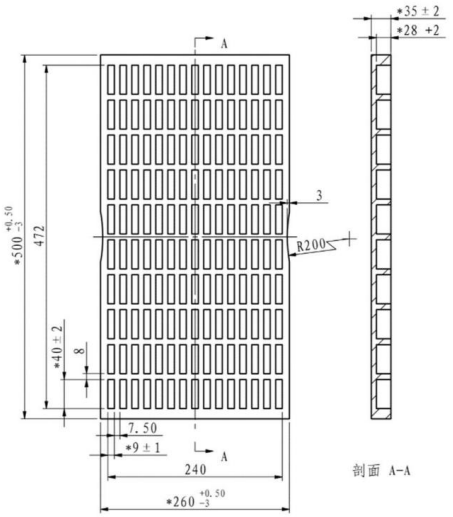

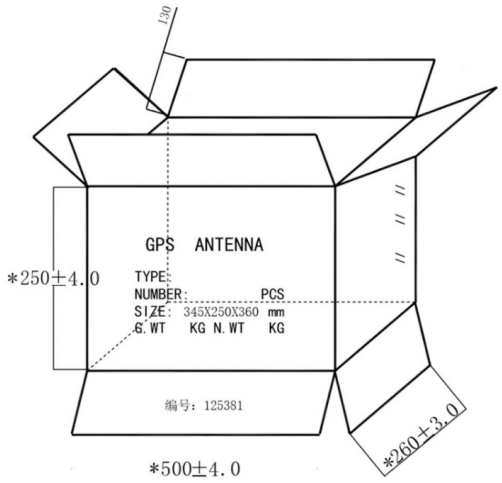

7.2 Electrostatic Protection

The MS38SN5 module is an electrostatic sensitive device (ESD). Observe the following precautions for handling! Failure to observe these precautions may seriously damage the GNSS receiver!

GNSS receivers are electrostatic sensitive devices (ESD) and require special precautions when handling. Because of the risk of electrostatic charges, extra care must be taken when handling the patch antenna. In addition to standard ESD safety practices, the following measures should be considered when handling receivers:

- Unless there is current coupling between the local GND (i.e., the bench) and the PCB GND, the first point of contact when handling the PCB must always be between the local GND and the PCB GND.
- Connect the device ground before installing the antenna patch.
- When handling RF pins, do not make contact with any charged capacitors and be careful when touching materials that generate a charge (e.g., patch antenna ~10 pF, coaxial cable ~50-80 pF/m, soldering iron).
- To prevent static generation through the RF input, do not touch any exposed antenna area. If there is a risk of touching exposed antenna areas in a non-ESD protected work area, take appropriate ESD protection measures in the design.
- Be sure to use an ESD-safe soldering iron when soldering RF connectors and patch antennas to the R F pins of the receiver.



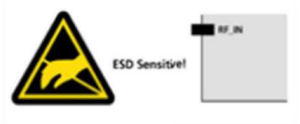





 Copyright© Shenzhen Minewsemi Co., Ltd.

8 ORDERING INFORMATION

8.1 Order Part Number

Ordering Model	Pseudolaric acid	Default Baud Rate	Default Satellite Reception Frequency	Module Size	Physical Interface
MS38SN5	GNSS Module/ G-MOUSE	115200 1Hz	GPS/BDS/ GLO/GAL	13*15.2*4.5mm	7Pin-PADs

9 STORAGE CONDITIONS

- **Please use this product within 6 months after signing up for it.**
  - This product should be stored without opening the package at an ambient temperature of 5~35°C and a humidity of 20~70%RH.
  - This product will be stored for more than 6 months after receipt. They must be confirmed before use.
  - Products must be stored in non-corrosive gases (CI2, NH3, SO2, NOx, etc.).
  - To avoid damage to the packaging materials, no excessive mechanical impact shall be applied, including but not limited to sharp objects adhering to the packaging materials and products falling.

- **This product is suitable for MSL3 (based on JEDEC standard J-STD-020).**
  - After opening the package, the product must be stored under conditions of ≤30°C/<60%RH. It is recommended to use it within 168 hours after opening the package.
  - When the color of the indicator in the package changes, the product should be baked before welding.

- **When exposed to (≥168h@30℃/60%RH) conditions, the recommended baking conditions:**
  1. 120 +5/-5℃, 8 hours, 1 time
  Products must be baked individually on heat-resistant trays because the materials (base tape, roll tape and cover tape) are not heat-resistant and the packaging materials may deform when the temperature is 120°C;
  2. 90℃ +8/-0℃, 24 hours, once
  The base tape can be baked together with the product at this temperature, Please pay attention to even heating.

10 HANDLING CONDITIONS

- Be careful in handling or transporting products because excessive stress or mechanical shock may break products.
- Handle with care if products may have cracks or damages on their terminals. If there is any such damage, the characteristics of products may change. Do not touch products with bare hands that may result in poor solder ability and destroy by static electrical charge.

11 QUALITY

Cognizant of our commitment to quality, we operate our own factory equipped with state-of-the-art production facilities and a meticulous quality management system. We hold certifications for ISO9001, ISO14001, ISO27001, OHSA18001, BSCI.

Every product undergoes stringent testing, including transmit power, sensitivity, power consumption, stability, and aging tests. Our fully automated module production line is now in full operation, boasting a production capacity in the millions, capable of meeting high-volume production demands.

 Copyright© Shenzhen Minewsemi Co., Ltd.

12 COPYRIGHT STATEMENT

This manual and all the contents contained in it are owned by Shenzhen Minewsemi Co., Ltd. and are protected by Chinese laws and applicable international conventions related to copyright laws.

The certified trademarks included in this product and related documents have been licensed for use by MinewSemi. This includes but is not limited to certifications such as BQB, RoHS, REACH, CE, FCC, BQB, IC, SRRC, TELEC, WPC, RCM, WEEE, etc. The respective textual trademarks and logos belong to their respective owners. For example, the Bluetooth® textual trademark and logo are owned by Bluetooth SIG, Inc. Other trademarks and trade names are those of their respective owners. Due to the small size of the module product, the "®" symbol is omitted from the Bluetooth Primary Trademarks information in compliance with regulations.

The company has the right to change the content of this manual according to the technological development, and the revised version will not be notified otherwise. Without the written permission and authorization of the company, any individual, company, or organization shall not modify the contents of this manual or use part or all of the contents of this manual in other ways. Violators will be held accountable in accordance with the law.

13 RELATED DOCUMENTS

- MinewSemi_Product_Naming_Reference_Manual_V1.0
  https://en.minewsemi.com/file/MinewSemi_Product_Naming_Reference_Manual_EN.pdf
- MinewSemi_Connectivity_Module_Catalogue_V2.0
  https://en.minewsemi.com/file/MinewSemi_Connectivity_Module_Catalogue_EN.pdf

For product change notifications and regular updates of Minewsemi documentation, please register on our website: **www.minewsemi.com**

SHENZHEN MINEWSEMI CO., LTD.

0086-755-2801 0353
https://minewsemi.com
minewsemi@minew.com
https://store.minewsemi.com
Gangzhilong Technology Park, Qinglong Road, Longhua District, Shenzhen